Earthing

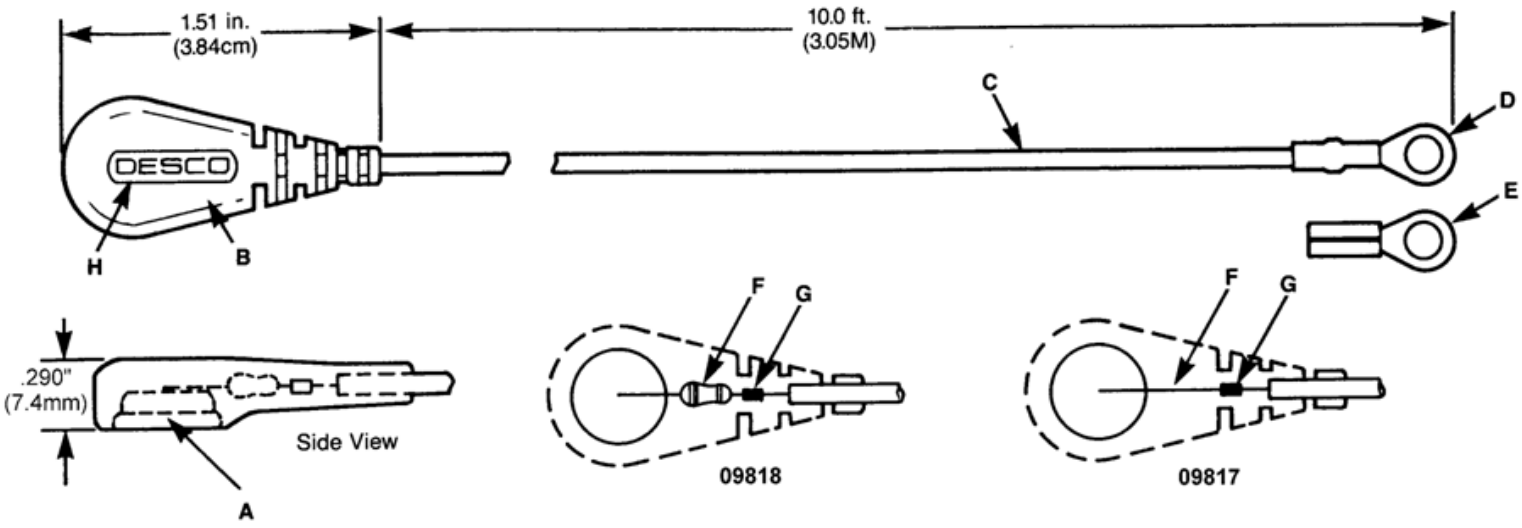

A. 10mm (.395") female snap socket to ground table and floor mats.

B. Molded in black thermoplastic elastomer.

c. 10' long, high flex strand copper, 20 gauge, with PVc insulated jacket.
09817 - green insulation with yellow stripe.
09818 - black insulation

D. ring terminal, .200" ID, (#10).

e. extra ring terminal provided for customizing length.

F. Item 09818 has a 1 megohm resistor between the snap and ground.
Item 09817 has no resistor between snap and ground.

G. Brass crimp secures conductors and provides stress relief.

H. Desco logo molded onto top of snap assembly.

I. Date coded with date of manufacture. Arrow points to month of manufacture (12:00 = December), numerals indicate the year (03 = 2003).

For Grounding esD Protective Floor Mats

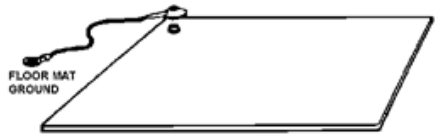

ITEM	DESCRIPTION
09817	no resistor - Green Wire with Yellow stripe
09818	one Megohm resistor to Mat - Black Wire

Specifications and procedures subject to change without notice.

GROUND CORD, FLOOR MAT

DESCO

DESCO WEST: 3651 WALnut AVe., cHino, cA 91710 WeB site: Desco.com
PHone (909) 627-8178 FAX (909) 627-7449 FAX reQuest (909) 627-7126

DESCO EAST: one coLGAte WAY, cAnton, MA 02021-1407
PHone (781) 821-8370 FAX (781) 575-0172

DRAWING NUMBER	DATE:
09817	February 2010

©2010 Desco InDustries Inc.
employee owned